Zero Due

Track 66 | 100 | 130

Body

Track mounted spotlight with light head and driver canopy in cast aluminium. Inclusive of reflector in metalized PC.

Available with 3 circuit universal track adapter or Dali track adapter. Designed for passive cooling. Available in three different sizes.

Versatile aiming angle tiltable vertically 0°-90° and rotatable horizontally 360°.

LED sources

Citizen CLU Series. Xicato Artist, Beauty and Designer Series. SORAA SLC Optical Light Engine.
CRI: 90, 95, 98 | CCT: 2700K, 3000K, 4000K.
Other CRI and CCT options, Tuneable White and DimToWarm versions available on request.

Optic

Reflector.
Narrow, medium and wide beam angle available.

Accessories

Coulored filters, linear spread, honeycomb louvre, visor, snoot.
Snap System™ accessories available for SORAA SLC series with narrow beam angle.

Driver

Driver canopy inclusive of no-dimable driver.
Dimming Options: 0-10V Dim, DALI, Phase, CASAMBI. The shape of the box may change according with the chosen diming options.

Finish

Powder coat in black and white colour.

Applications

A modern design consisting for the purpose to meet the highest requirements of the latest advanced lighting technology.
Application areas: retail, museums, hospitality, residential, offices, lobbies.

Related Products

Zero Compasso Track
P.134

Zero Projector Track
P.140

Coco Pro Track
P.150

Zero Due Surface
P.178

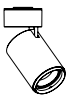

Zero Pendant
P.220

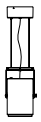

Zero Due

Zero Due 66 / 100 / 130

Track

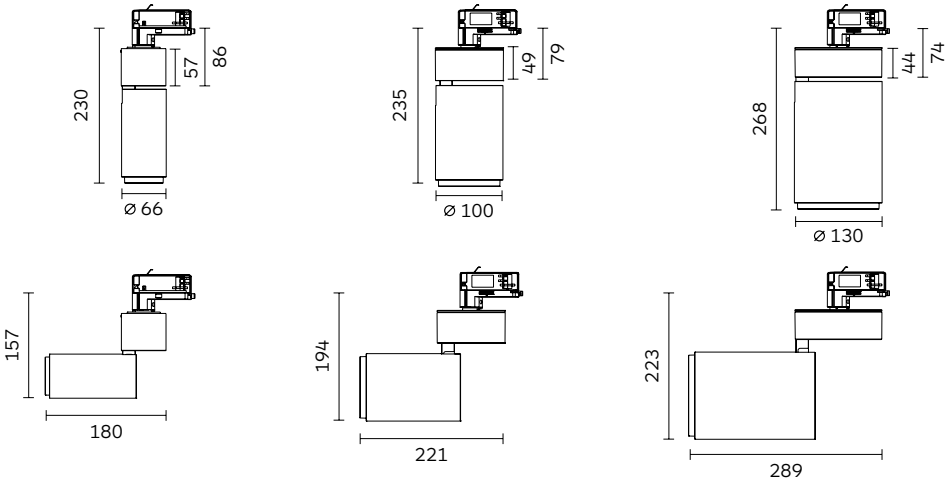

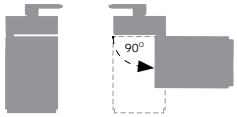

Code ordering example: **6 4 5 5 B C 3 2 - 9 0 3 0 1 5 D 0 1 0**

	Product Code	Light Source Code*	>CRI	CCT**	LED Power	Nominal Lumen	Beam Angle (BA°)	Driver Options		Finish
Zero Due 66 Track	**6455**	**BC32**	**90**	**30** 3000K	12W	1357 lm	**15 / 23 / 45**	**D0**	No Dim	**10** ■ Black
				40 4000K		1414 lm		**DP**	Phase Dim	**11** □ White
Zero Due 100 Track	**6447**	**BC33**			33W	3114 lm	**12 / 27 / 55**	**D0**	No Dim	
						3245 lm		**DA**	Dali Dim	
Zero Due 130 Track	**6438**	**BC34**			45W	3978 lm	**10 / 18 / 42**	**DP**	Phase Dim	
						4144 lm		**DC**	CASAMBI	
								D1	0-10V Dim	

Notes:

* For complete code ordering information, please see page 377.

** For other CCT options, please contact us.

For related accessories, please see page 139

Zero Compasso & Zero Due Family configuration options

Code ordering example: **6 4 5 5 B C 3 2 - 9 0 3 0 1 5 D 0 1 0**

Zero Compasso & Zero Due 66

Track

Product Code	Light Source Code			>CRI	CCT	LED Power	Nominal Lumen	Beam Angle (BA°)	Driver Options	Finish
6455 Zero Due	**BC32** Citizen	COB		**90**	**30** 3000K	12W	1357 lm	**15 / 23 / 45**	**D0** No Dim	**10** ■ Black
6526 Zero Compasso					**40** 4000K		1414 lm		**DA** Dali Dim	**11** □ White
	BS12 Soraa	SLC-16		**95**		10W	500 lm	**10 / 25 / 36**	**DP** Phase Dim	
							525 lm		**DC** CASAMBI	
	BX25 Xicato	Artist	XTM	**98**	**27** 2700K	20W	1700 lm	**30 / 42 / 55**	**D1** 0-10V Dim	
	BX32	Beauty	XTM	**95**			2000 lm	**28 / 35 / 45**		
	BX42	Designer	XTM	**90**		17.1W				

Zero Compasso & Zero Due 100

Track

Product Code	Light Source Code			>CRI	CCT	LED Power	Nominal Lumen	Beam Angle (BA°)	Driver Options	Finish
6447 Zero Due	**BC33** Citizen	COB		**90**	**30** 3000K	33W	3114 lm	**12 / 27 / 55**	**D0** No Dim	**10** ■ Black
					40 4000K		3245 lm		**DA** Dali Dim	**11** □ White
6490 Zero Compasso	**BC21**					25 W	3018 lm	**20 / 30 / 38**	**DP** Phase Dim	
							3064 lm		**DC** CASAMBI	
6447 Zero Due	**BS12** Soraa	SLC-30		**95**		20W	1200 lm	**09 / 25 / 36**	**D1** 0-10V Dim	
6490 Zero Compasso							1300 lm			
	BX26 Xicato	Artist	XTM	**98**	**27** 2700K	30.5W	2140 lm	**20 / 40 / 60**		
	BX43	Designer	XTM	**90**		25.7W				

Zero Compasso & Zero Due 130

Track

Product Code	Light Source Code			>CRI	CCT	LED Power	Nominal Lumen	Beam Angle (BA°)	Driver Options	Finish
6438 Zero Due	**BC34** Citizen	COB		**90**	**30** 3000K	45W	3978 lm	**10 / 18 / 42**	**D0** No Dim	**10** ■ Black
					40 4000K		4144 lm		**DA** Dali Dim	**11** □ White
6489 Zero Compasso	**BC21**					37W	4147 lm	**14 / 24 / 38**	**DP** Phase Dim	
							4210 lm		**DC** CASAMBI	
6438 Zero Due	**BX18** Xicato	Standard	XTM	**83**	**27** 2700K	30.5W	3850 lm	**20 / 40 / 60**	**D1** 0-10V Dim	
6489 Zero Compasso	**BX44**	Designer	XTM	**90**		41.8W	4500 lm			

Notes:

For other CCT options, please contact us.

Optical Accessories

Product / Optical Accessories	Coloured Filters Colours 25, 42, 55, 85	Linear Spread Colour 41	Honeycomb Louvre Colour 10	Visor Colours 10, 17	Snoot Colours 10, 17
Zero Compasso / Zero Due 66 Track	**2A48***	**2A51**	**2A54**	**2A60**	**2A65**
Zero Compasso / Zero Due 100 Track	**2A47***	**2A50**	**2A53**	**2A64**	**2A59**
Zero Compasso / Zero Due 130 Track	**2A46***	**2A49**	**2A52**	**2A63**	**2A58**

***** With holder